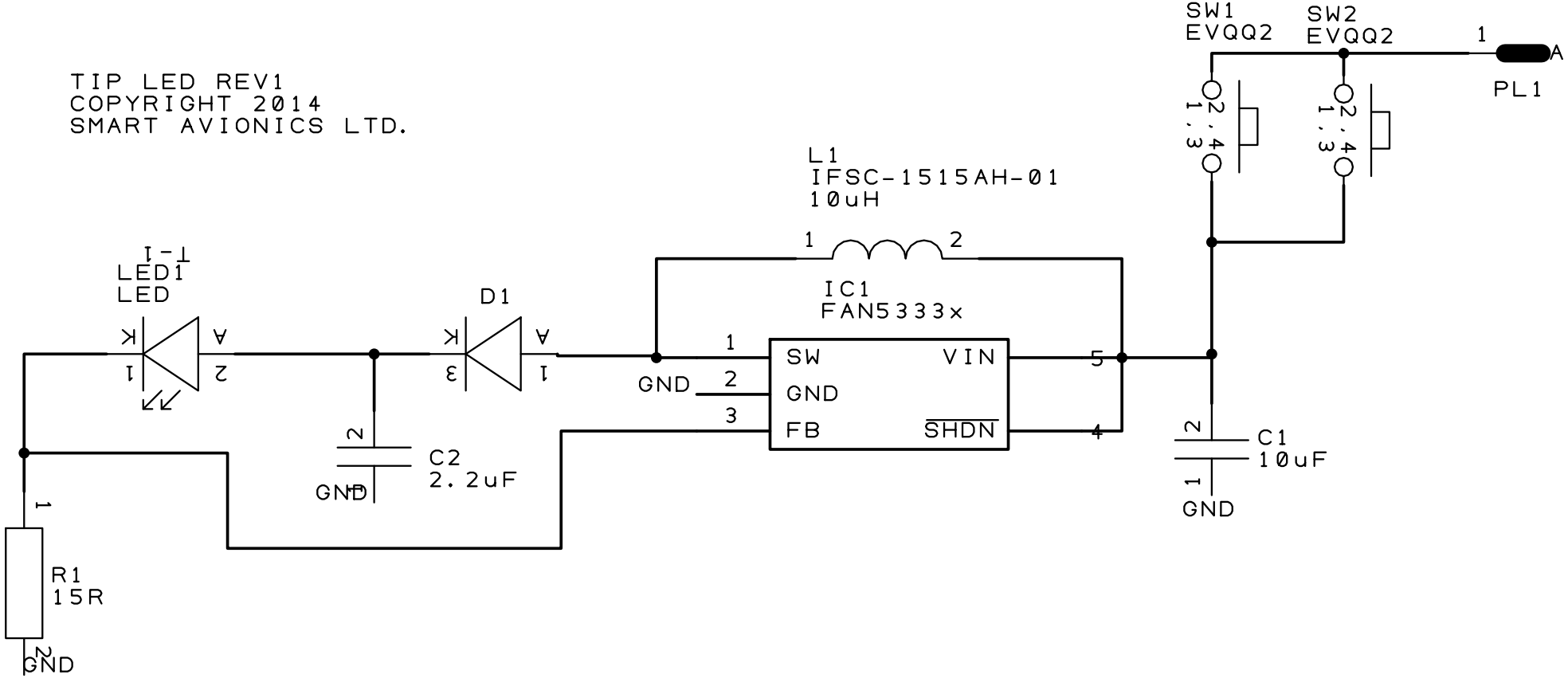
TIP LED REV1
COPYRIGHT 2014
SMART AVIONICS LTD.
SW1
EVQQ2
SW2
EVQQ2
1
A
PL1
2,4
1,3
2,4
1,3
L1
IFSC-1515AH-01
10uH
1
2
IC1
FAN5333x
LED1
LED
T-1
K
A
1
2
D1
K
A
3
1
GND
1
2
3
SW
GND
FB
VIN
SHDN
5
4
2
C2
2.2uF
GND
2
C1
10uF
1
GND
1
R1
15R
2
GND